SMOOTH WIRE FENCE NOTES

1. THE FENCING DETAILED HEREIN SHALL BE PAID BY LINEAR FOOT OF FENCE AND SHALL BE COMPENSATION FOR THE FENCING COMPLETE AND IN PLACE. INCLUDED IN THIS WORK (BUT NOT LIMITED TO) IS WIRE STAYS, WIRE TIES, PULL PANELS, CORNER PANELS, AND FENCE POSTS. WHEN CONNECTING FENCING TO A STATIONARY POST (i.e. A GATE POST) THE POST SHALL NOT BE INCLUDED IN THE FENCING PAY ITEM.
2. ALL WIRE SHALL BE BARBLESS WIRE.
3. INTERIOR PULL PANELS SHALL BE SPACED AT 500 ft. MAXIMUM.
4. WHEN PLACING AN END PULL PANEL AT AN ACCESS WAY OR GATE, ATTACH THE FENCING TO THE STATIONARY POST AS DETAILED ON STANDARD DRAWING 202.

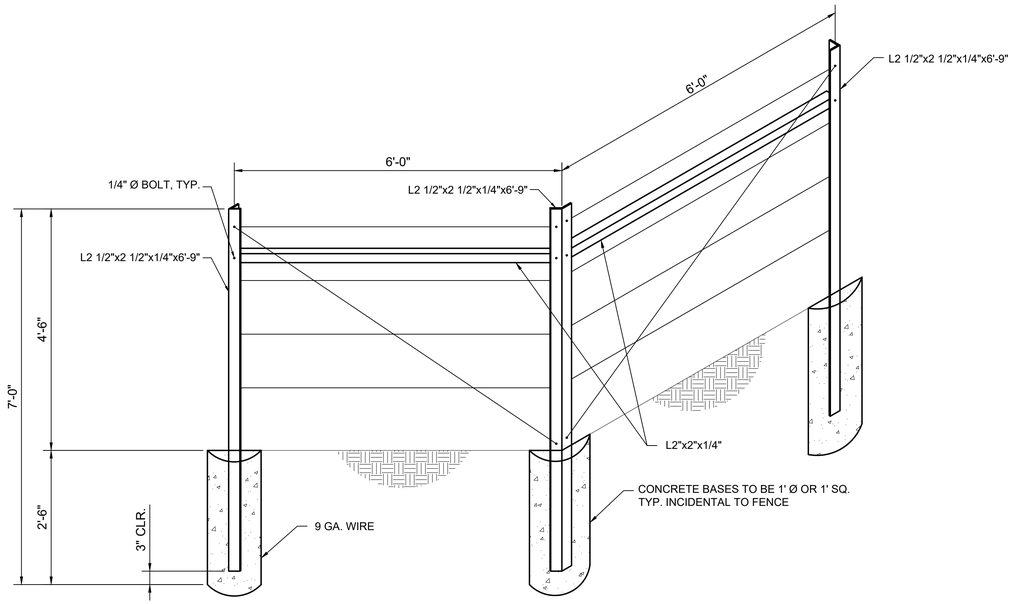

CORNER PANEL

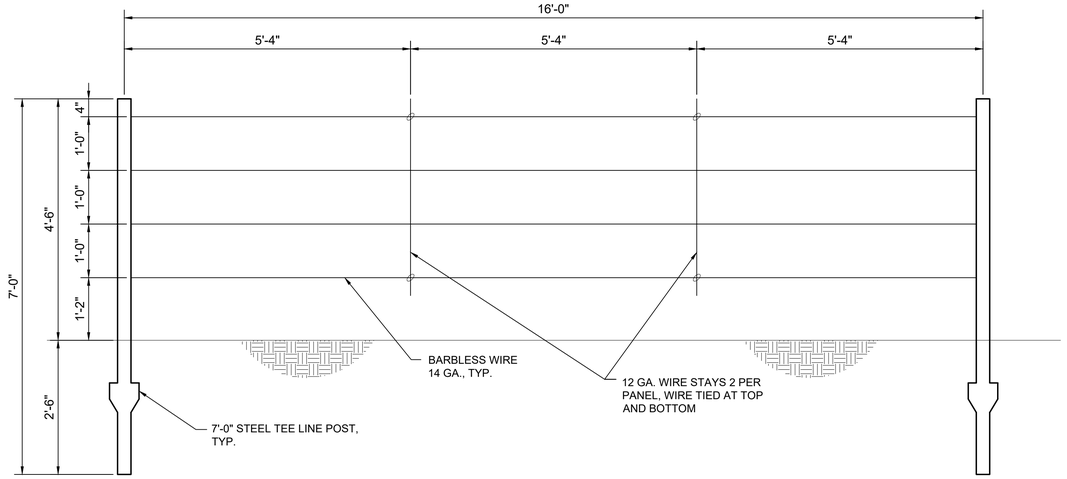

SMOOTH WIRE FENCE PANEL

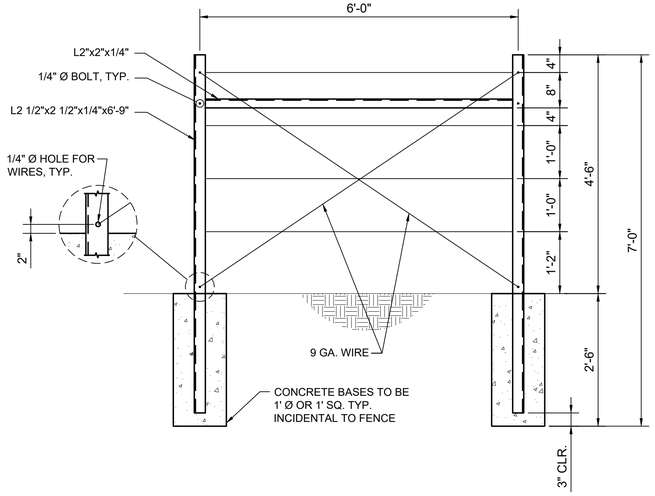

TYPICAL PULL PANEL

ALBUQUERQUE METROPOLITAN ARROYO FLOOD CONTROL AUTHORITY		
SMOOTH WIRE FENCE DETAILS		
ISSUE DATE: MARCH 2026	DRAWING NO. 203	SHEET 1 OF 1